REVIT MANUAL

Ceiling diffuser

PTVD | PTDD

SUMMARISED REVIT BIM MANUAL SOLID AIR MODELS

SOLID AIR® INTERNATIONAL ▪ +31 598 36 12 21 ▪ www.solid-air.com ▪ contact@solid-air.com

Summarised manual Revit BIM-models Solid Air

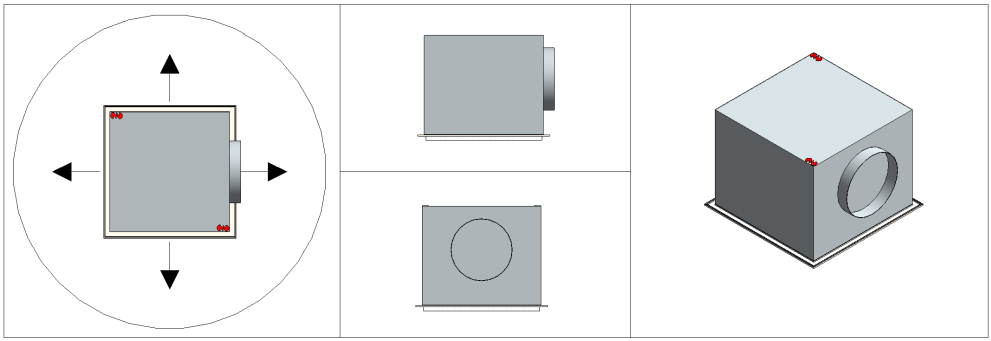

Text		
SACS_Warning_Text_Other		
SACS_Warning_Text_Flow		Warnings when outcomes are outside the given threshold values.
SACS_Warning_Text_Ploss		
SACS_Warning_Text_Sound		
Materials and Finishes		
SACS_Color	RAL 9010	Used color.
SACS_Flange_Color	**RAL 9010**	
SACS_Face_Color	**RAL 9010 Perforated**	Material color for model*.
SACS_Lining_Material	Armaflex	Internal insulation plenum.
SACS_Lining_Thickness	12.0	Insulation thickness.
Dimensions		
NLRS_M_c01_diameter	200.0	Nominal connection size.
SACS_Ceiling_Hole	388.0	Recess size ceiling.
SACS_Face_Square	423.0	Square size ceiling plate.
SACS_Plenum_Height	315.0	Height of the plenum .
Size	200 ∅	
Mechanical		
SACS_Cooling_Capacity	671.00 W	Cooling capacity with volume**.
SACS_Heating_Capacity	0.00 W	Heating capacity with volume**.
SACS_Max_Lp_dBA	**28**	Maximum allowed sound production.
SACS_Max_Ploss	**35.000000 Pa**	Maximum allowed pressure loss.
SACS_Room_Temperature	**25.00 °C**	Design room temperature.
SACS_Primairy_Air_Temperature	**15.00 °C**	Design air temperature.

Mechanical - Flow		
NLRS_M_c01_debiet	**200.0000 m³/h**	Air flow.
NLRS_M_c01_drukverlies_statisch	2.700000 Pa	Static pressure loss at airflow.
SACS_Lp_DbA	15	Sound power level at airflow (room attenuation: 10 dB).
SACS_Throw	1060.0	Throw with volume**.
Identity Data		
NLRS_C_model	PTVDOR 400	Article name selected diffuser.
NLRS_C_materiaal_kleur	RAL 9010	Entered diffuser color.
SACS_Article_Code	8001000172	Order number***.
SACS_Gross_Cost	182.00	Gross price***.
SACS_Price_Date	01-02-2022	Validity date price.
SACS_Type_Mark		
Model Properties		
SACS_Option_1	PTVD	Flat or 13 mm dropped.
SACS_Option_2	OR	Plenum/connection version.
SACS_Option_3	4-sided	Discharge pattern.
SACS_Sunken_Face	☐	Select 13 dropped panel.
SACS_Connector_Top	☐	Select plenum with top connection.
SACS_Lined_Plenum	☑	Select insulated plenum.
SACS_Oval_Connector	☐	Select plenum with oval connection.
SACS_Low_Plenum	☐	Select dropped plenum.
SACS_Standard_Color	☑	Select diffuser with standard color.
SACS_Color_Ral	☑	Select (different) RAL color.
SACS_Costum_Color		Use costum color.
SACS_Flow_Configuration (1-5)	**4**	Select discharge pattern.
SACS_Flow_Direction	**0**	Select discharge direction in relation to connection.
Visibility		
SACS_Arrows_and_Throw_En...	☑	Show arrows and throw.
SACS_Throw_Visible	☑	Show throw.
SACS_Warning_Disabled	☐	Hide warning on model.

Notes

*If a different color is required for the diffuser, the view of the model can be given a different color.

** Capacity and throw depend on the room temperature and the supplied-air temperature

*** Order numbers are only given when it concerns a product that was available in our ERP on the version date and that is a standard RAL 9010 version.

Possible configurations

Not every conceivable combination is possible for the plenum. The model will adjust to what is possible, and the corresponding option will be shown under the parameter "SACS_Option_2"

OA: Round top connection.
OU: Uninsulated plenum (not possible with round top connection).
OR: Insulated plenum (not possible with round top connection).
OU OV: Uninsulated plenum with oval connection (not possible with round top connection).
OR OV: Insulated plenum oval connection (not possible with round top connection).
OU VP: Uninsulated, dropped plenum (not possible with round top and oval connection).
OR VP: Insulated, dropped plenum (not possible with round top and oval connection).

When "SACS_Standard_Color" is on, the standard RAL 9010 diffusers will be used for the price and the order number.
When "SACS_Sandard_Color" is off and "SACS_Color_Ral" is on, the color in the parameter "SACS_Custom_Color" is used as the entered color. There is no order number for this, and the displayed price is for using a non-standard RAL color (i.e. not RAL 9010).
When "SACS_Sandard_Color" is off and "SACS_Color_Ral" is off, the color in the parameter "SACS_Custom_Color" is used as the entered color. There is no order number for this, and the displayed price is for using a non RAL color.

NB: a color-change surcharge applies per delivery and per color for using non-standard colors!

Guidelines for fitting the model

The parameter “SACS_Flow Configuration” determines the inflow pattern of the diffuser. The selected pattern is given in the parameter “SACS_Option_3”.
In Detail Level “Coarse” this is shown as below.

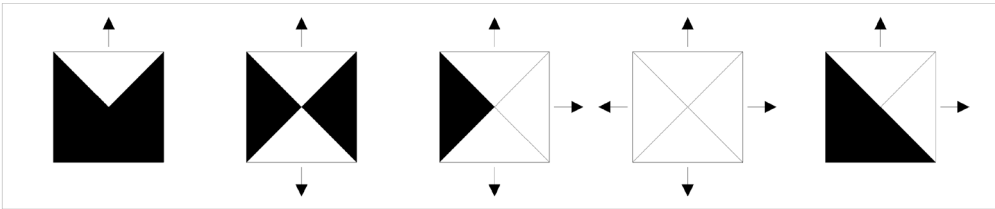

1	2	3	4	5
1-sided	2-sided opposite	3-sided	4-sided	2-sided angle

With a value smaller than 1, 1-sided is used; when it is greater than 5, 2-sided angle is used.

The parameter “SACS_Flow_Direction” determines the inflow direction in relation to the connector, per 90 degrees.

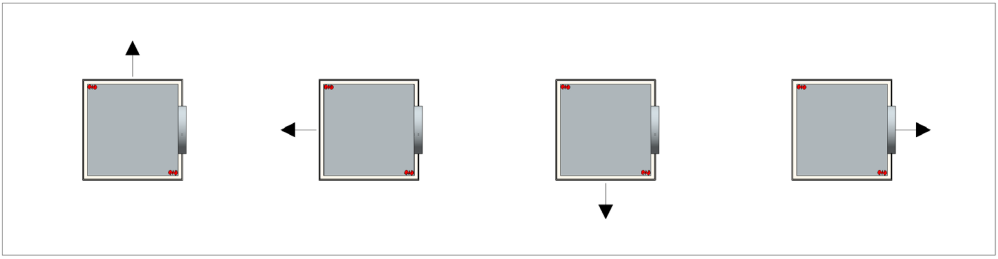

0, 4, 8, etc.	1, 5, 9, etc.	2, 6, 10, etc.	3, 7, 11, etc.

SOLID AIR®
INTERNATIONAL

Solid Air International
A. PO Box 14, 9610 AA Sappemeer
T. +31 598 36 12 21
E. contact@solid-air.com
W. www.solid-air.com